Diritti riservati All rights reserved

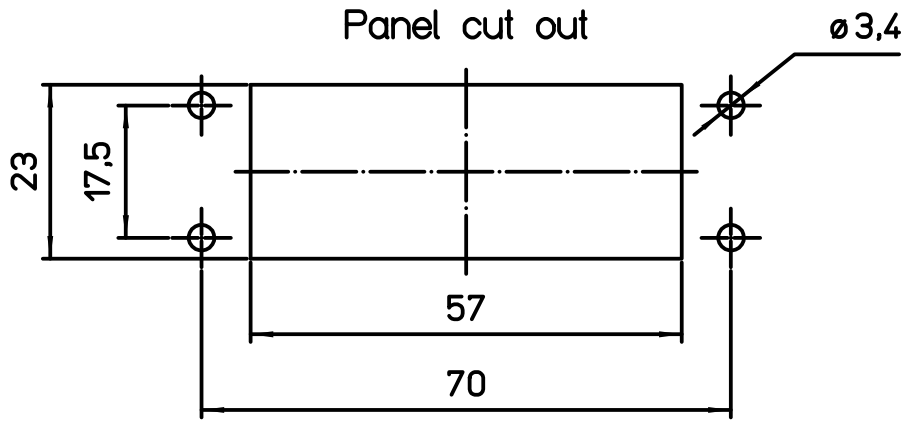

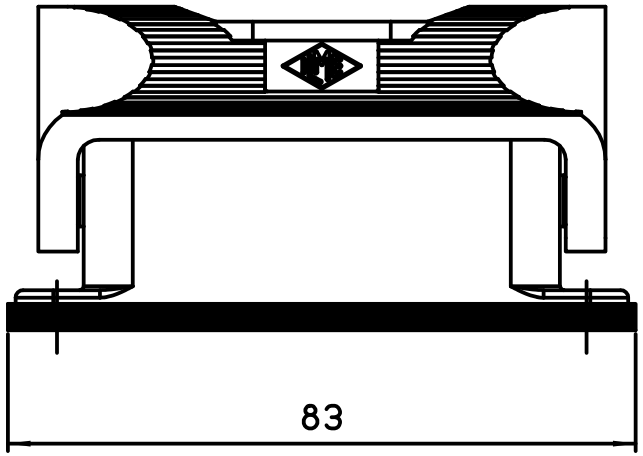

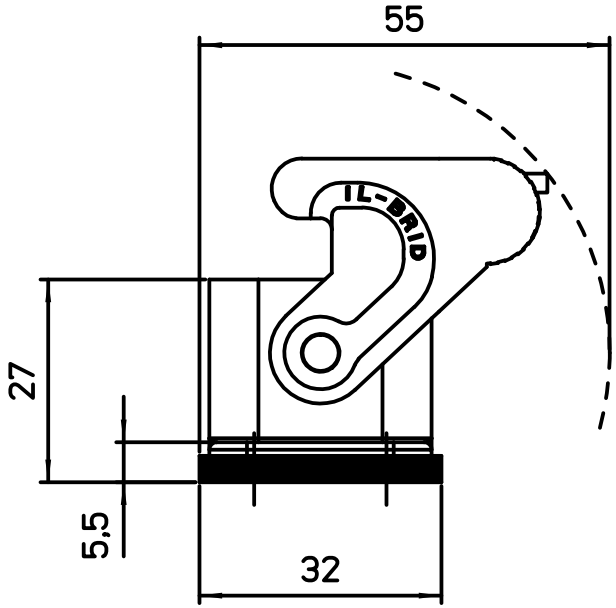

dimensions in mm	CZI 15 L	Scale
Date 30/10/18	Bulckhead mounting housing with single lever	1:1
Sign. D.Cominelli		